G:\10147\10147E50_002.dgn
12/21/2010
3:00:41 PM
© COPYRIGHT 2007, DAVIS, STOKES COLLABORATIVE P.C.
ALL RIGHTS RESERVED.

ENTECH ENGINEERING INC.
5301 VIRGINIA WAY
BRENTWOOD, TN 37027
v. 615.373.2640
email@entechtn.com
f. 615.373.4637
entechtn.com

GEORGIA REGISTERED No. 12075 PROFESSIONAL ENGINEER PAUL BILLINGS
12/21/10

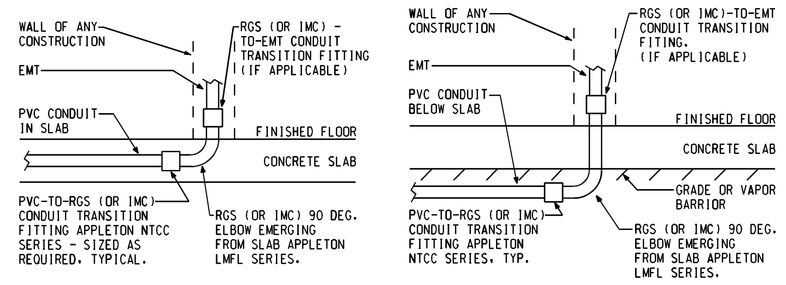

CONDUIT TRANSITION: PVC-TO-RGS IN SLAB
SCALE: NONE

CONDUIT TRANSITION: PVC-TO-RGS BELOW SLAB
SCALE: NONE

G7

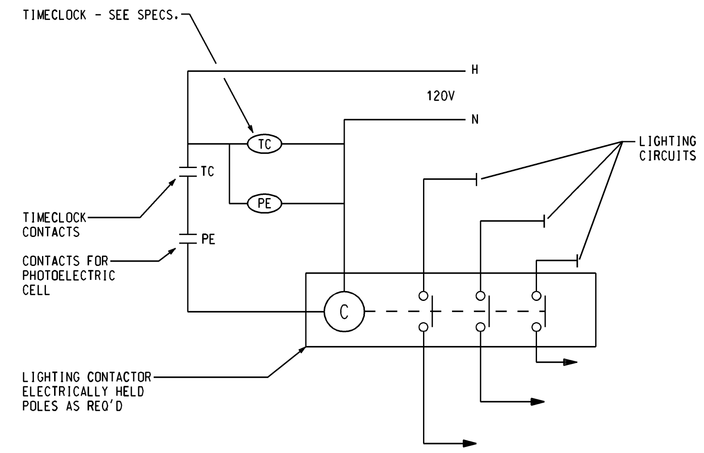

OUTSIDE LIGHTING CONTROL
SCALE: NONE

J1

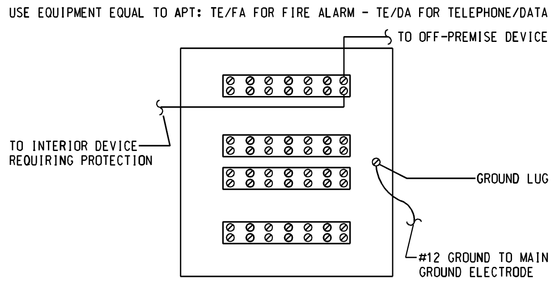

NOTES:
1. MOUNT DEVICE APPROXIMATELY 10' AWAY FROM FIRE ALARM PANEL OR TELEPHONE EQUIPMENT.
2. TERMINATE OFF-PREMISE CONDUCTORS ON INPUT SIDE OF DEVICE.
3. CONNECT OUTPUT SIDE OF DEVICE TO EQUIPMENT REQUIRING PROTECTION.
4. CONNECT THE GROUND LUG TO BUILDING GROUND WITH 3#12 COPPER WIRE.

TVSS INSTALLATION WIRING DIAGRAM
INCOMING DATA AND FIRE LINES
SCALE: NONE

J9

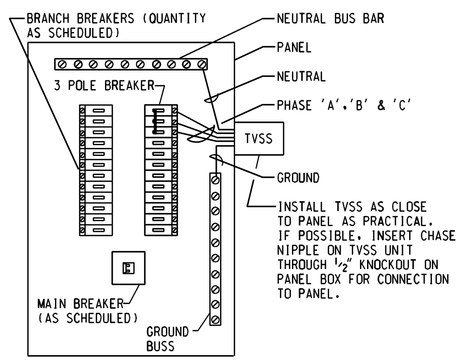

NOTE: CONNECT THE PHASE 'A','B' & 'C' WIRES OF TVSS UNIT TO AN EXISTING 3 POLE BREAKER WITH AN AMPACITY NOT LESS THAN 20 NOR MORE THAN 60. IF NO SUCH BREAKER EXIST, INSTALL ONE 20 AMP/3 POLE BREAKER FOR CONNECTION TO TVSS.

TVSS INSTALLATION WIRING DIAGRAM
MAIN AND BRANCH PANELS
SCALE: NONE

J10

ATHENS MEDICAL PLAZA I
2142 WEST BROAD STREET
ATHENS, GEORGIA
ATHENS GEORGIA

THIS DOCUMENT CONTAINS INFORMATION WHICH IS PROPRIETARY TO DAVIS, STOKES COLLABORATIVE, P.C. THIS DOCUMENT AND/OR ITS CONTENTS MAY NOT BE REPRODUCED OR DISCLOSED TO OTHERS, EITHER IN WHOLE OR IN PART, WITHOUT THE PRIOR WRITTEN CONSENT OF DAVIS, STOKES COLLABORATIVE, P.C. COPYRIGHT 2007, ALL RIGHTS RESERVED

DAVIS · STOKES
COLLABORATIVE, P.C.
A · R · C · H · I · T · E · C · T · S
7121 CROSSROADS BLVD. BRENTWOOD, TENNESSEE 37027
TEL: 615-726-0010
http://www.dsccol.com EMAIL: dsccinfo@dsccol.com
FAX: 615-726-2090

REVISION

NO.	DATE	DESCRIPTION

E3.02

ISSUE DATE:	JOB NUMBER
12.21.10	08004

bfergusson
8.0 : 1" / in.