© COPYRIGHT 2007, DAVIS, STOKES COLLABORATIVE P.C. ALL RIGHTS RESERVED.

DRAWING CREATED: 11/4/2010 8:16 AM
LAST DRAWING UPDATE: 12/21/2010 7:15 AM
PLOT DATE: 5/28/2008 11:03 AM
FILE NAME: 08004_A651.dwg
SCALE FACTOR: 1:8

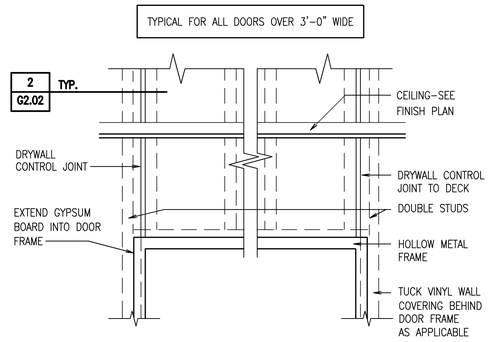

15 CONTROL JOINT @ DOOR N.T.S.

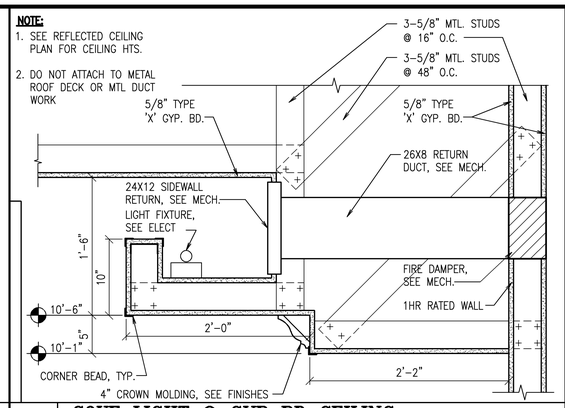

11 COVE LIGHT @ GYP BD CEILING 0 3" 6" 12"

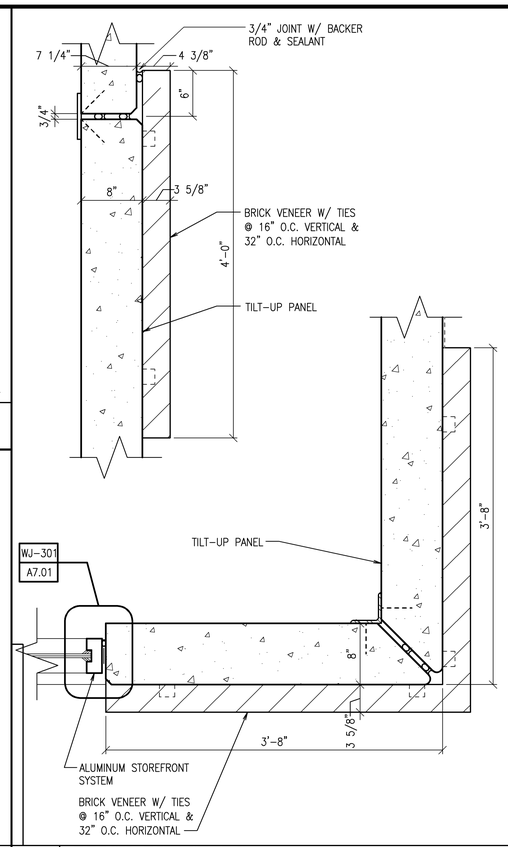

7 BRICK PILASTERS 0 3" 6" 12"

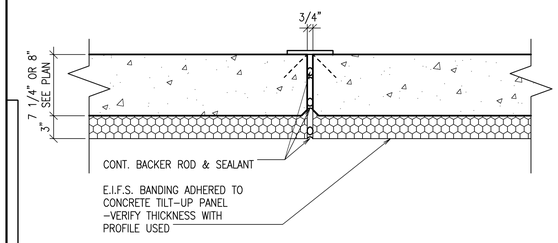

4 CONTROL JOINT @ TILT-UP PANELS/E.I.F.S. 0 3" 6" 12"

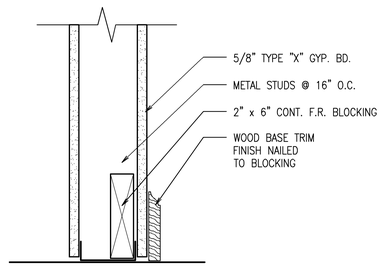

NOTE:
SEE FINISH PLAN FOR LOCATION

14 BLOCKING @ WOOD BASE N.T.S.

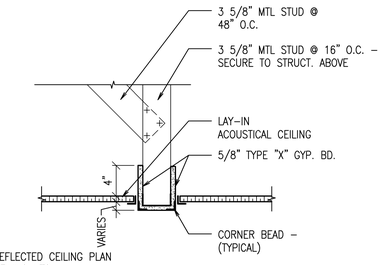

NOTE:
1. SEE REFLECTED CEILING PLAN FOR CEILING HTS.
2. DO NOT ATTACH TO METAL ROOF DECK OR METAL DUCT WORK

10 GYPSUM BOARD BULKHEAD 0 3" 6" 12"

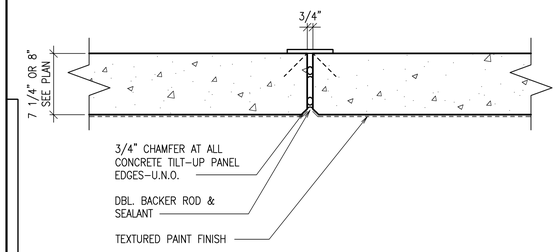

3 ALIGNMENT @ TILT-UP PANELS 0 3" 6" 12"

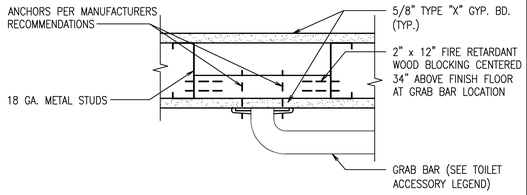

NOTE:
GRAB BAR ATTACHMENTS SHALL BE CAPABLE OF SUPPORTING 300 LB. MIN. FORCE IN ANY DIRECTION.

13 GRAB BAR ATTACHMENT - MTL. STUD N.T.S.

9 NOT USED

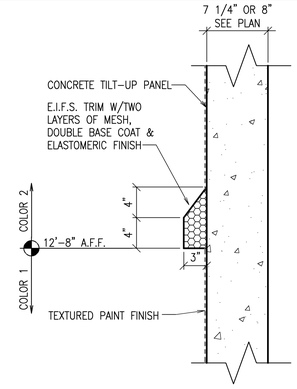

6 E.I.F.S. TRIM 0 3" 6" 12"

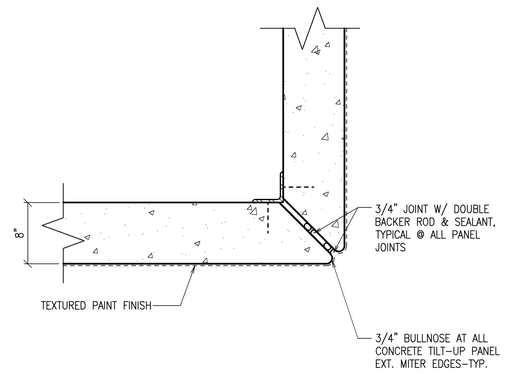

2 OUTSIDE CORNER @ TILT-UP PANELS 0 3" 6" 12"

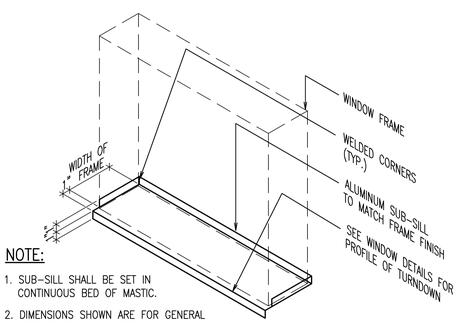

NOTE:
1. SUB-SILL SHALL BE SET IN CONTINUOUS BED OF MASTIC.
2. DIMENSIONS SHOWN ARE FOR GENERAL REFERENCE ONLY - SEE WINDOW DETAILS & SECTIONS FOR ACTUAL SUB SILL PROFILE & DIMENSIONS

12 TYPICAL SUB SILL N.T.S.

8 NOT USED

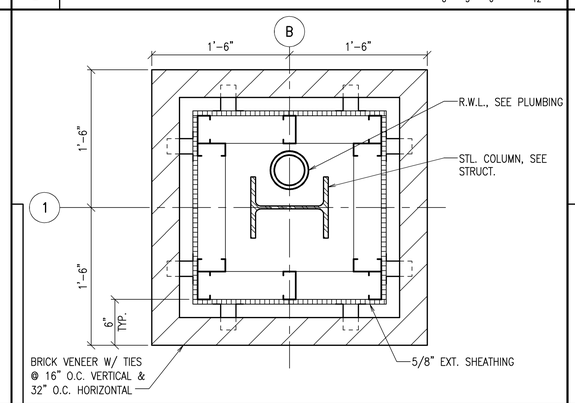

5 TYPICAL COLUMN @ CANOPY 0 3" 6" 12"

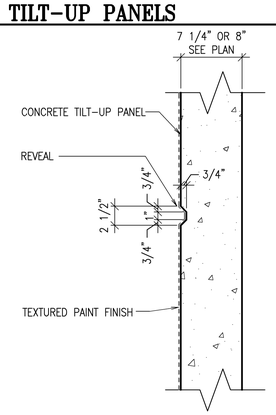

1 LARGE REVEAL @ TILT-UP PANELS 0 3" 6" 12"

STATE OF GEORGIA
WILLIE O. STOKES
ATLANTA, GEORGIA
REGISTERED ARCHITECT

ATHENS MEDICAL PLAZA I
2142 WEST BROAD STREET
ATHENS, GEORGIA

THIS DOCUMENT CONTAINS INFORMATION THAT IS PROPRIETARY TO DAVIS, STOKES COLLABORATIVE, P.C. THIS DOCUMENT AND/OR ITS CONTENTS MAY NOT BE REPRODUCED OR DISCLOSED TO OTHERS, EITHER IN WHOLE OR IN PART, WITHOUT PRIOR WRITTEN CONSENT OF DAVIS, STOKES COLLABORATIVE, P.C. COPYRIGHT 2007, ALL RIGHTS RESERVED

DAVIS · STOKES
COLLABORATIVE, P.C.
A · R · C · H · I · T · E · C · T · S
7121 CROSSROADS BLVD. BRENTWOOD, TENNESSEE 37027
http://www.dscscol.com EMAIL: dsccinfo@dsccol.com
TEL: 615-726-0010
FAX: 615-726-2090

REVISION

NO.	DATE	DESCRIPTION

A6.51

ISSUE DATE: 12.21.10
JOB NUMBER: 08004