© COPYRIGHT 2007, DAVIS, STOKES COLLABORATIVE P.C. ALL RIGHTS RESERVED.

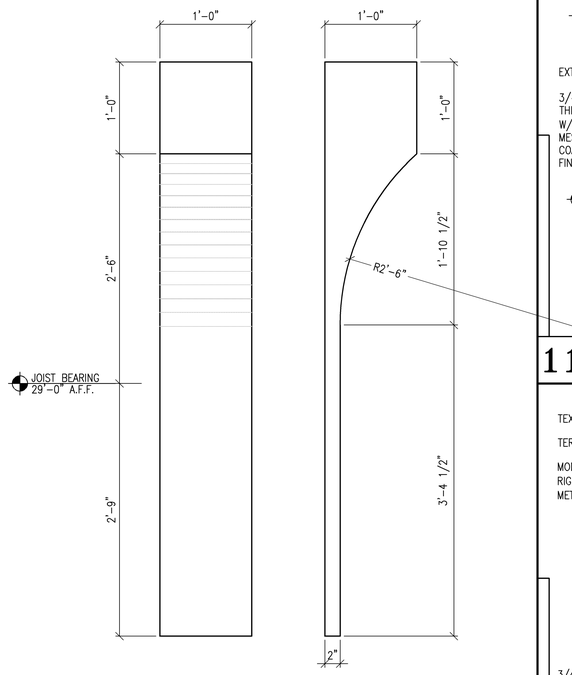

14 E.I.F.S. ACCENT

0 3" 6" 12"

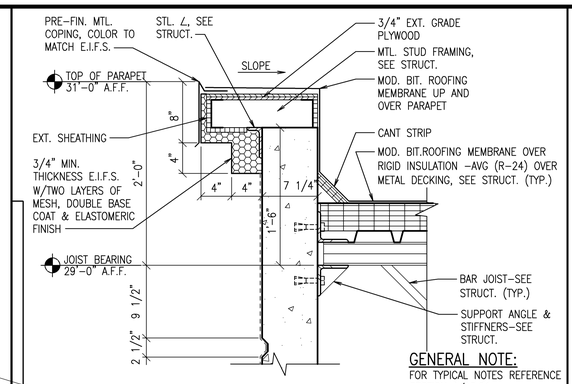

GENERAL NOTE:
FOR TYPICAL NOTES REFERENCE SECTION A/A6.21

11 E.I.F.S. CORNICE @ LOW PARAPET

0 3" 6" 12"

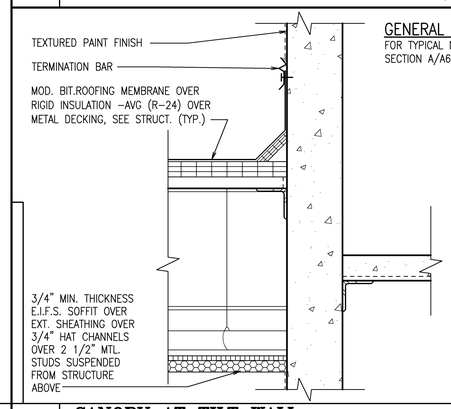

GENERAL NOTE:
FOR TYPICAL NOTES REFERENCE SECTION A/A6.21

10 CANOPY AT TILT WALL

0 3" 6" 12"

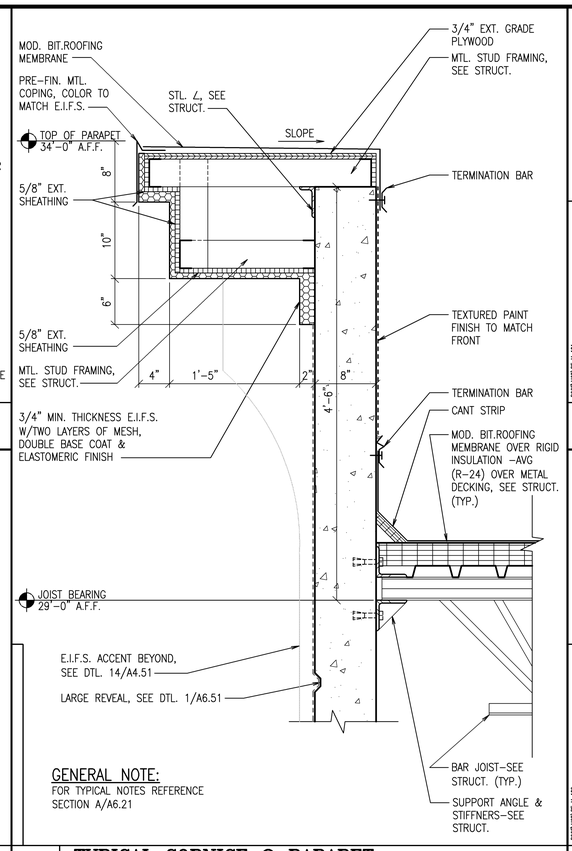

GENERAL NOTE:
FOR TYPICAL NOTES REFERENCE SECTION A/A6.21

7 TYPICAL CORNICE @ PARAPET

0 3" 6" 12"

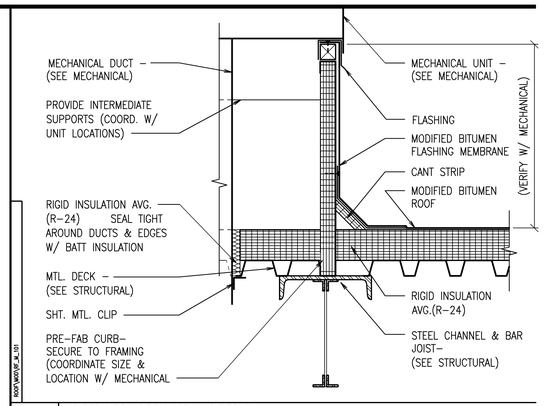

4 MECHANICAL CURB

0 3" 6" 12"

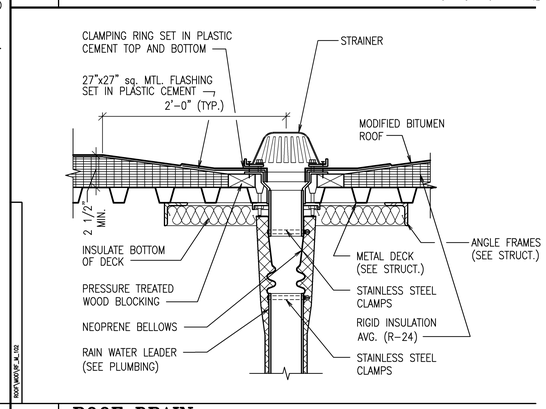

3 ROOF DRAIN

N.T.S.

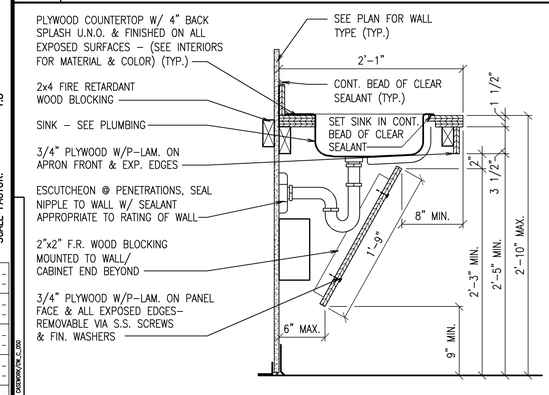

13 ACCESSIBLE LAVATORY WITH APRON

0 3" 6" 12"

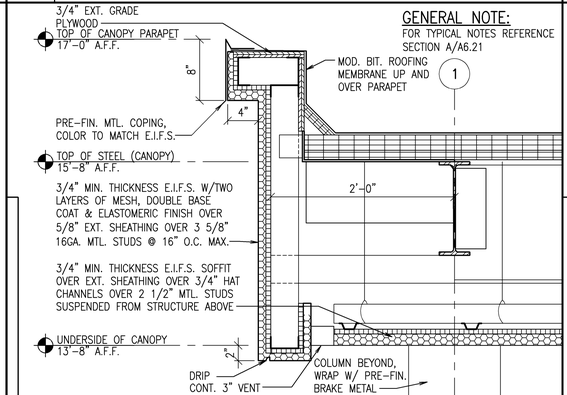

GENERAL NOTE:
FOR TYPICAL NOTES REFERENCE SECTION A/A6.21

9 EDGE OF CANOPY

0 3" 6" 12"

GENERAL NOTE:
FOR TYPICAL NOTES REFERENCE SECTION A/A6.21

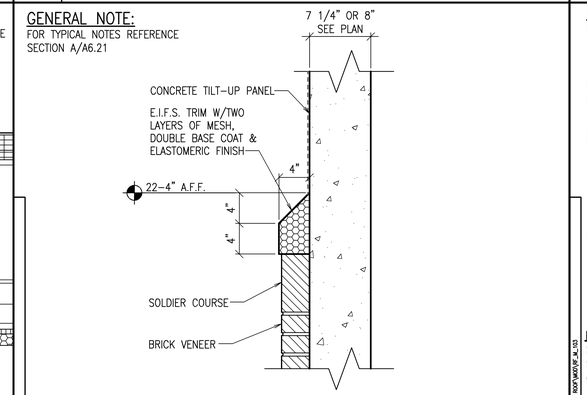

6 E.I.F.S. CAP @ BRICK PILASTER

0 3" 6" 12"

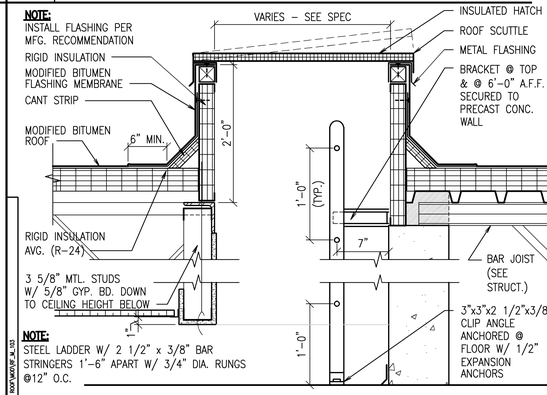

2 ROOF SCUTTLE

N.T.S.

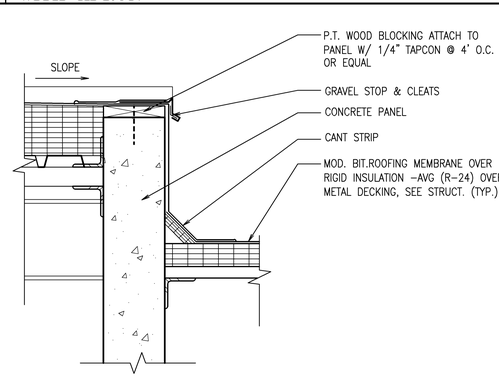

12 SHAFT ENCLOSURES @ ROOF

0 3" 6" 12"

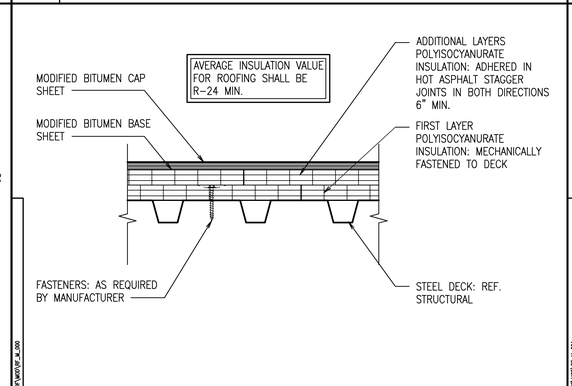

8 ROOF SYSTEM: TYPICAL

0 3" 6" 12"

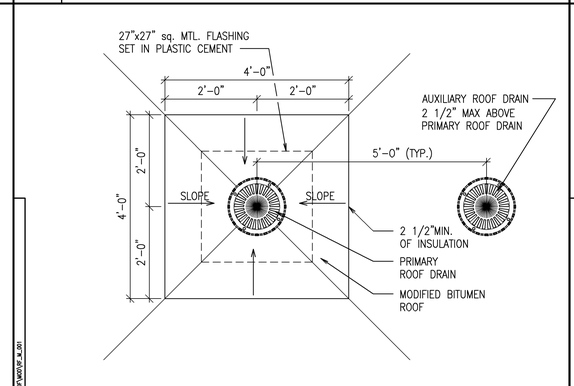

5 ROOF DRAIN & AUXILIARY DRAIN LOCATION

N.T.S.

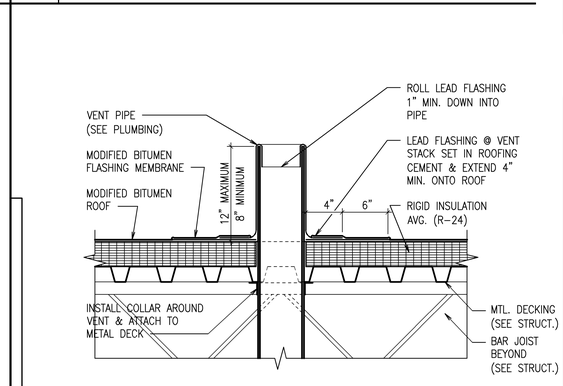

1 VENT PIPE TERMINATION

N.T.S.

DRAWING CREATED: 11/5/2010 6:56 AM
LAST DRAWING UPDATE: 12/20/2010 12:18 PM
PLOT DATE: 6/29/2009 11:03 AM
FILE NAME: 08004_A4.51.dwg
SCALE FACTOR: 1:3

A-EXST	A-EXST		
A-GRAP	A-GRAP		
A-GRID	A-GRID		
A-PATT	A-PATT		
A-NAME	A-NAME		
A-NOTE	A-NOTE		
A-TBDEN	A-TBDEN	BLK	
A4.51	A4.51	BLK	

STATE OF GEORGIA — WILLIE O. STOKES — CERTIFICATE NO. 6680 — REGISTERED ARCHITECT

ATHENS MEDICAL PLAZA I
2142 WEST BROAD STREET
ATHENS, GEORGIA

THIS DOCUMENT CONTAINS INFORMATION WHICH IS PROPRIETARY TO DAVIS, STOKES COLLABORATIVE, P.C. THIS DOCUMENT AND/OR ITS CONTENTS MAY NOT BE REPRODUCED OR DISCLOSED TO OTHERS, EITHER IN WHOLE OR IN PART, WITHOUT THE PRIOR WRITTEN CONSENT OF DAVIS, STOKES COLLABORATIVE, P.C. COPYRIGHT 2007, ALL RIGHTS RESERVED

D A V I S · S T O K E S
C O L L A B O R A T I V E, P. C.
A · R · C · H · I · T · E · C · T · S
7121 CROSSROADS BLVD. BRENTWOOD, TENNESSEE 37027 TEL: 615-726-0010
http://www.dscco.com EMAIL: dsccinfo@dsccol.com FAX: 615-726-2090

REVISION

NO.	DATE	DESCRIPTION

A4.51

ISSUE DATE:	JOB NUMBER
12.21.10	08004