G:\10147\Surgery\10147m70_001.dgn
1/31/2011
12:49:02 PM
© COPYRIGHT '2+1' DAVIS, STOKES COLLABORATIVE P.C.
ALL RIGHTS RESERVED.

ENTECH ENGINEERING INC.
5301 VIRGINIA WAY
BRENTWOOD, TN 37027
v. 615.373.2640
f. 615.373.4637
email@entechengr.com
GEORGIA REGISTERED PROFESSIONAL ENGINEER
MITCHELL D. SIMPSON
2/1/11

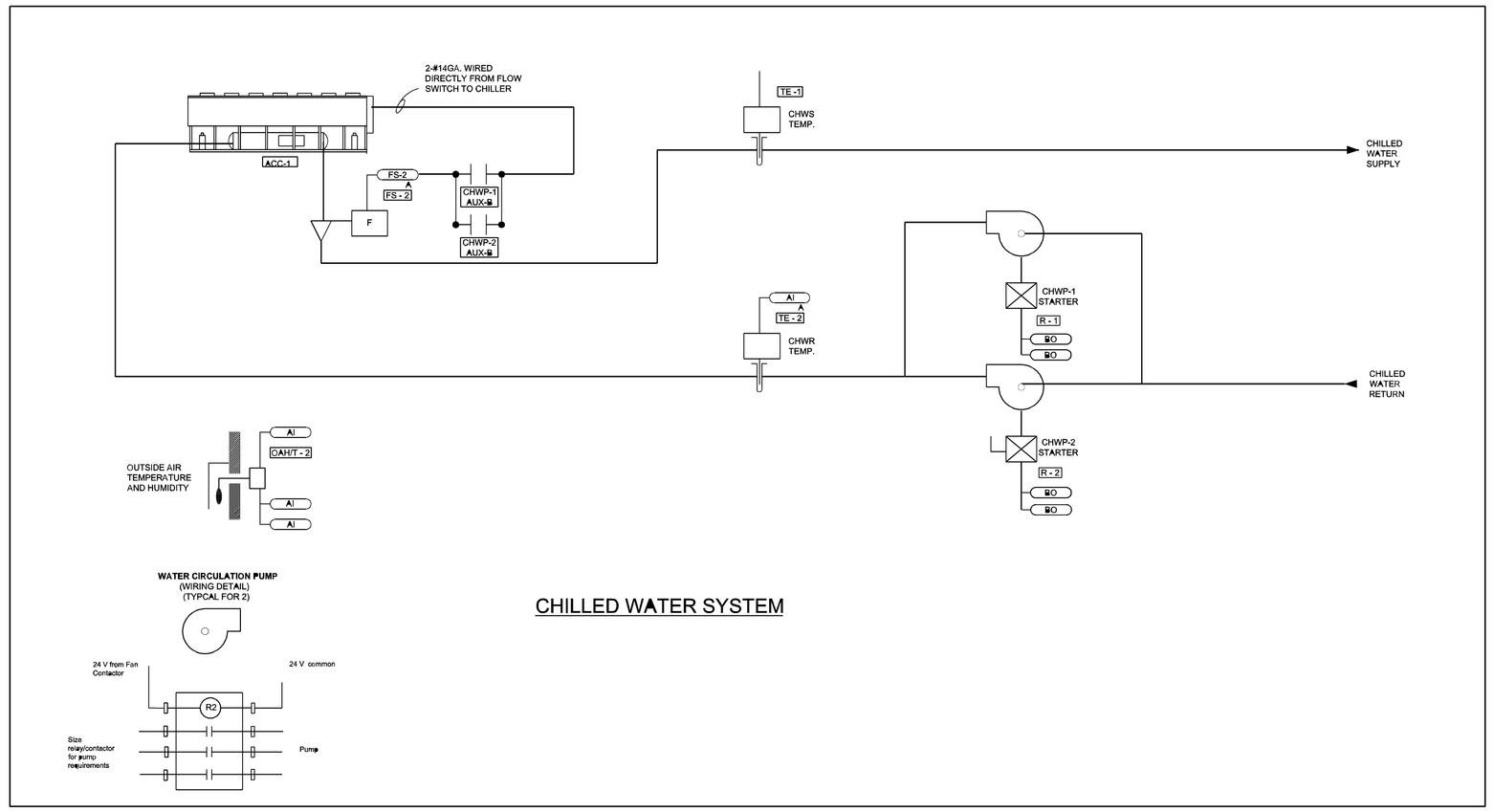

CHILLED WATER SYSTEM

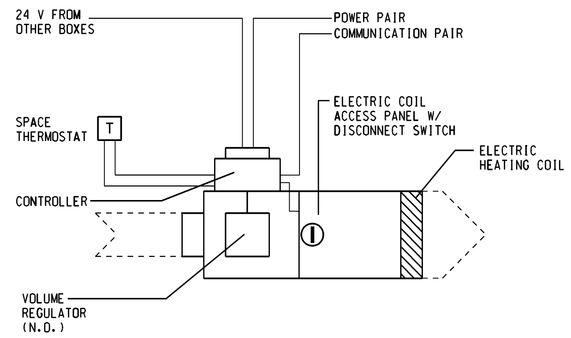

DDC VAV TERMINAL UNIT CONTROL

DDC VAV/CV TERMINAL UNIT SEQUENCE OF OPERATION

GENERALLY, AIR IS SUPPLIED TO INDIVIDUAL SPACES BY THE VAV/CV VOLUME BOXES.

CONTROLS SHALL BE AS FOLLOWS:

A. ON A RISE IN SPACE TEMPERATURE ABOVE THE THERMOSTAT SET POINT, THE VAV/CV BOX ELECTRIC HEATING COIL SHALL BE DE-ENERGIZED. ON A FURTHER RISE IN SPACE TEMPERATURE, THE VAV BOX SHALL BE MODULATED FROM THE MINIMUM CFM SETTING TO THE MAXIMUM CFM SETTING AS SCHEDULED ON THE DRAWINGS.

B. ON A DROP IN SPACE TEMPERATURE BELOW THE THERMOSTAT SET POINT, THE FIRST STAGE OF ELECTRIC HEAT SHALL BE ENERGIZED. UPON FURTHER DROP IN SPACE TEMPERATURE IN SPACE TEMPERATURE, ADDITIONAL STAGES OF ELECTRIC HEAT SHALL BE ENERGIZED.

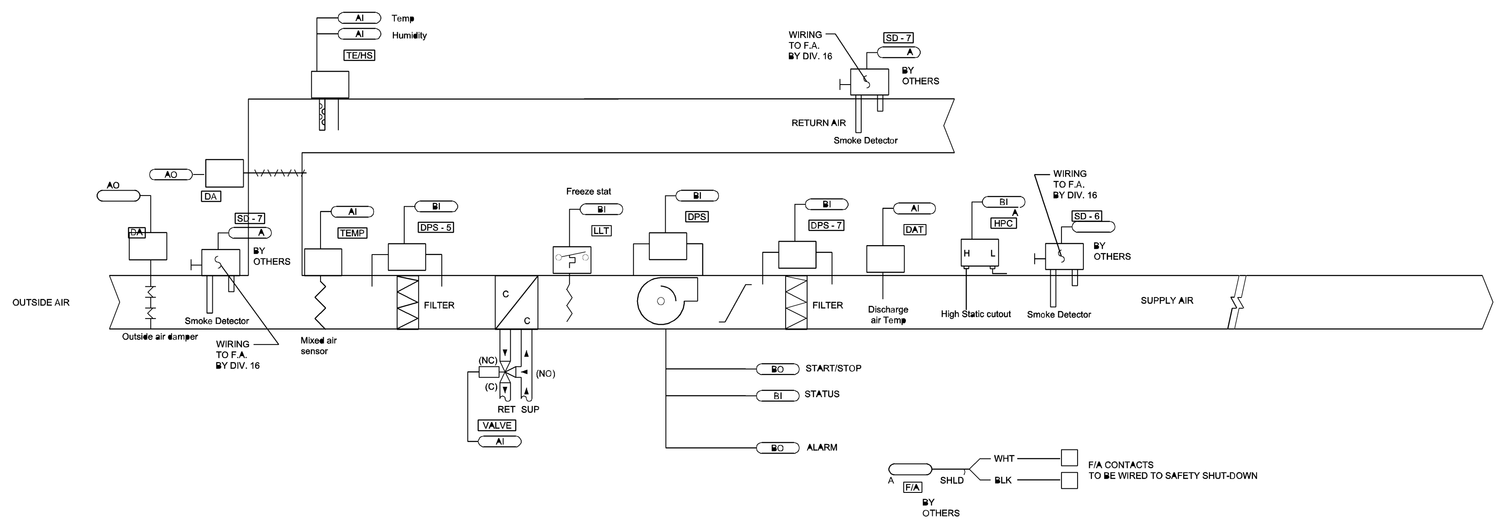

RTU-1 CONTROL

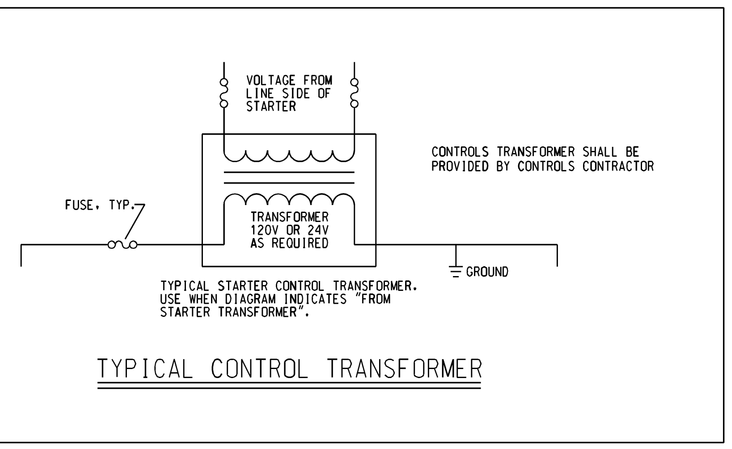

TYPICAL CONTROL TRANSFORMER

XX

Abbreviations

ADJ ADJUSTABLE
AFS AIR FLOW STATION
AHU AIR HANDLING UNIT
AI ANALOG INPUT
AVG AVERAGE
BAS BUILDING AUTOMATION SYSTEM
BFU BLOWER FILTER UNIT
CB CIRCUIT BREAKER
CCW COUNTERCLOCKWISE
CFM CUBIC FEET PER MINUTE
CHW CHILLED WATER
CKT CIRCUIT
CO CARBON MONOXIDE
CO2 CARBON DIOXIDE
COMM 2 COMMUNICATIONS LINK TYPE 2
COMM 3 COMMUNICATIONS LINK TYPE 3
COMM 4 COMMUNICATIONS LINK TYPE 4
COMM 5 COMMUNICATIONS LINK
COMP COMPRESSOR
COND CONDENSER
CS CONTROL SWITCH
CU CONDENSING UNIT
CV VALVE COEFFICIENT
CV CONSTANT VOLUME
CW CONDENSER WATER
D DIRECT DRIVE
D DAMPER
DA DAMPER ACTUATOR
DDC DIGITAL DIRECT CONTROL
DPS DIFFERENTIAL PRESSURE SWITCH
DPT DIFFERENTIAL PRESSURE TRANSMITTER
DX DIRECT EXPANSION
E EXHAUST AIR
EDM2 EXHAUST/COMPARATIVE ENTHALPY MODULE
EDH ELECTRIC DUCT HEATER
EP ELECTRIC PRESSURE SWITCH
EPT ELECTRIC PRESSURE PNEUMATIC TRANSDUCER
EVAP EVAPORATOR
FA FRESH AIR
FAN FAN SWITCH
FS FLOW SWITCH
GBAS GENERIC BUILDING AUTOMATION SYSTEM
GND GROUND
GPM GALLONS PER MINUTE
HC HIGH CONTROL
HE HUMIDITY ELEMENT
HFER HUMIDIFIER
HP HORSE POWER BRASS
HI HUMAN INTERFACE
HOA HAND-OFF-AUTOMATIC
HPS HIGH PRESSURE SWITCH
HTR HEATER
HVAC HEATING, VENTILATION AND AIR CONDITIONING
INV INOT WATER
I/O INPUT / OUTPUT
IAQ INDOOR AIR COMFORT SYSTEM
IGV INLET GUIDE VANES
IPC INTERPROCESSOR COMMUNICATIONS
IPCB INTERPROCESSOR COMMUNICATIONS BRIDGE
KW KILOWATTS
KWH KILOWATT HOURS
LH LEFT HAND
LHP LIMIT SWITCH - HIGH PRESSURE
LHT LIMIT SWITCH - HIGH TEMP
LLT LIMIT SWITCH - LOW TEMP
MA MILLIAMP
MCC MOTOR CONTROL CENTER
MCM MOTOR CONTROL MODULE
MP TRANE MULTIPURPOSE CONTROLLER
MS MOTOR STARTER
MWU MORNING WARMUP
N NEUTRAL
N.C. NORMALLY CLOSED CONTACT
N.O. NORMALLY OPEN CONTACT
NSB NIGHT SETBACK
OA OUTSIDE AIR
P PRESSURE SENSOR
PCM TRANE PROG DDC CONTROLLER
PFS PROOF OF FLOW SWITCH
PL PILOT LIGHT
PRI PRIMARY
PRV PRESSURE REDUCING VALVE
PSI POUNDS PER SQUARE INCH, GAUGE
PT PRESSURE TRANSMITTER
R RELAY
RA RETURN AIR
RAM RUN ASSISTANT MONITOR
RH RELATIVE HUMIDITY
RH RIGHT HAND
RPM REVOLUTIONS PER MINUTE
RTM ROOFTOP MODULE
SA SUPPLY AIR
SCM SINGLE CIRCUIT MODULE
SD SMOKE DETECTOR
SEC SECONDARY
SH SHIELDED
SV SOLENOID VALVE
TAV TRANE VAV UNIT FLOW)
T THERMOSTAT (ELECTRONIC)
TC1 TRACER COMMUNICATIONS MODULE
TCP TRANE CHILLER UNIT CONTROL PANEL
TE TEMPERATURE ELEMENT
TP TWISTED PAIR CABLE
TS TEMPERATURE SWITCH
TSP TWISTED SHIELDED PAIR CABLE
TUC TRANE UNIT CONTROLLER PANEL
UCM UNIT CONTROL MODULE
UCP TRANE CHILLER UNIT CONTROL PANEL
UCP UNIVERSAL PROG DDC CONTROLLER
V VALVE
VAC VOLTS ALTERNATING CURRENT
VDC VOLTS DIRECT CURRENT
VCM VENTILATION CONTROL MODULE
VDC VOLTS DIRECT CURRENT
VFD VARIABLE FREQUENCY DRIVE
VOM VENTILATION OVERRIDE MODULE
VP VAPOR PRESSURE
WSM WATERSIDE MODULE
XFMR TRANSFORMER
ZCP TRANE ZONE CONTROLLER
ZSM ZONE SENSOR MODULE

Symbol Legend

FLOW SWITCH
FLOAT SWITCH
TEMPERATURE SWITCH
PRESSURE SWITCH
LIMIT SWITCH - N.O.
PUSHBUTTON SWITCH
SELECTOR SWITCH
PILOT LIGHT
CONTACTOR / RELAY COIL
NORMALLY CLOSED CONTACTS
NORMALLY OPEN CONTACTS
TRANSFORMER
VARIABLE FREQUENCY DRIVE (VFD)
WATER FLOW METER
CURRENT SENSING SWITCH
PUMP / FAN
C-COOLING COIL
H-HEATING COIL
FILTER
DAMPER WITH ACTUATOR
AIR FLOW STATION
SMOKE DETECTOR
DUCT HUMIDITY SENSOR
HUMIDITY SENSOR W/TEMPERATURE
HUMIDITY SENSOR (SPACE)
STATIC PRESSURE TIP
INDOOR AIR QUALITY SENSOR
ZONE SENSOR (THERMOSTAT)
INSERTION TEMP SENSOR
AVERAGING TEMP SENSOR
PRESSURE SENSOR
DIFFERENTIAL PRESS SENSOR
2-WAY MOTORIZED VALVE
3-WAY MOTORIZED VALVE

SURGERY CENTER OF ATHENS
AT
ATHENS MEDICAL PLAZA I
2142 WEST BROAD STREET
ATHENS, GEORGIA

THIS DOCUMENT CONTAINS INFORMATION WHICH IS PROPRIETARY TO DAVIS, STOKES COLLABORATIVE, P.C. THIS DOCUMENT AND/OR ITS CONTENTS MAY NOT BE REPRODUCED OR DISCLOSED TO OTHERS, EITHER IN WHOLE OR IN PART, WITHOUT THE PRIOR WRITTEN CONSENT OF DAVIS, STOKES COLLABORATIVE, P.C. COPYRIGHT '2+1', ALL RIGHTS RESERVED

DAVIS · STOKES
COLLABORATIVE, P.C.
A · R · C · H · I · T · E · C · T · S
7121 CROSSROADS BLVD. BRENTWOOD, TENNESSEE 37027
TEL: 615-726-0010
http://www.dsccal.com EMAIL: dsccinfo@dsccal.com
FAX: 615-726-2090

REVISION

NO.	DATE	DESCRIPTION

M4.01

ISSUE DATE:	JOB NUMBER
02.01.11	10061

bfarguson
8:0 ": / in.