G:\10147\Surgery\10147E50_001.DGN
1/31/2011
12:48:52 PM
© COPYRIGHT '2+1' DAVIS, STOKES COLLABORATIVE P.C.
ALL RIGHTS RESERVED.

ENTECH ENGINEERING INC.
5301 VIRGINIA WAY
BRENTWOOD, TN 37027
v. 615.373.2640 f. 615.373.4637
email@entechtn.com
SUITE 140
entechtn.com

GEORGIA REGISTERED No. 12075 PROFESSIONAL ENGINEER PAUL BILLINGS
2/1/11

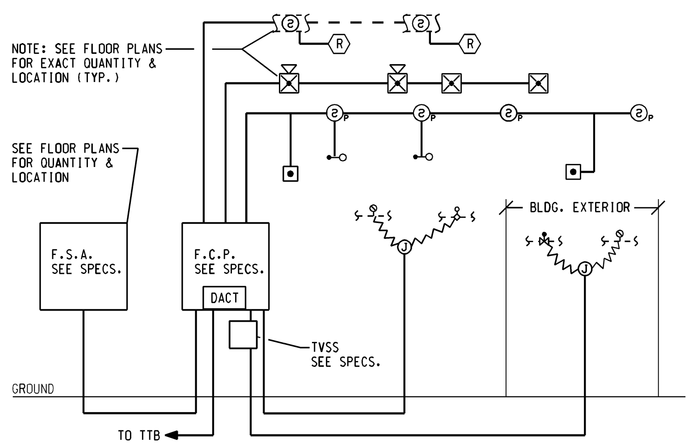

PARTIAL FIRE ALARM RISER DIAGRAM

SCALE: NONE

C2

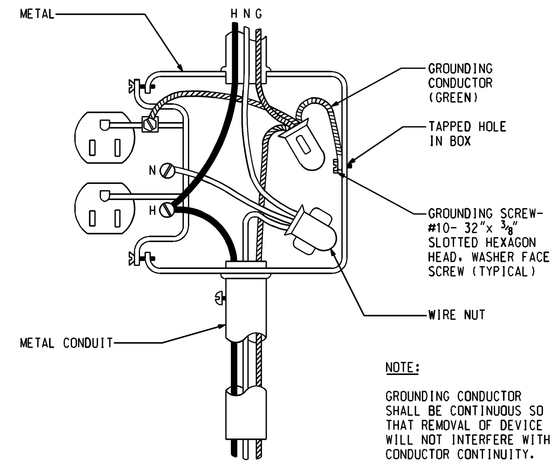

RECEPTACLE GROUNDING DETAIL

SCALE: NONE

F5

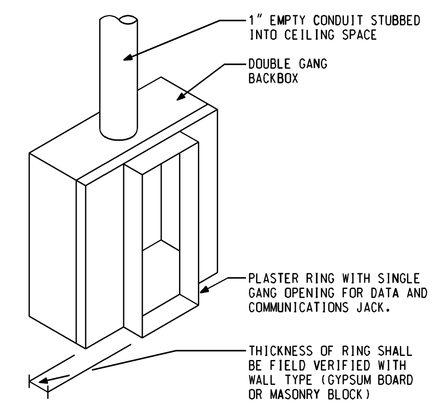

DATA & COMMUNICATIONS OUTLET DETAIL

SCALE: NONE

G11

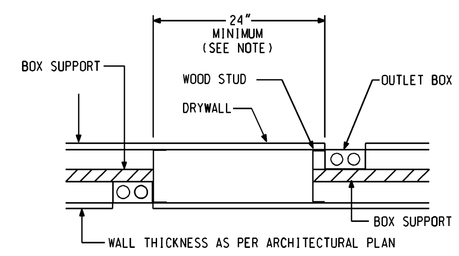

NOTE: THE MINIMUM SHOWN MAY BE REDUCED (IF APPROVED BY LOCAL AUTHORITY) WHEN "WALL OPENING PROTECTIVE MATERIALS" (CLIV) ARE INSTALLED IN ACCORDANCE WITH THEIR CLASSIFICATION REQUIREMENTS. WHEN USED, UL CLASSIFIED MOLDABLE PUTTY PADS MUST BE USED ON BOTH BOXES.

RECEPTACLE SEPARATION IN RATED WALLS

SCALE: NONE

F2

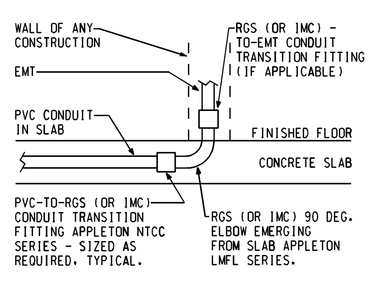

CONDUIT TRANSITION: PVC-TO-RGS IN SLAB

SCALE: NONE

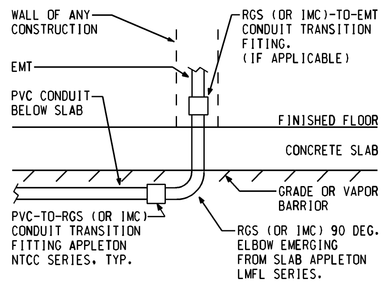

CONDUIT TRANSITION: PVC-TO-RGS BELOW SLAB

SCALE: NONE

G7

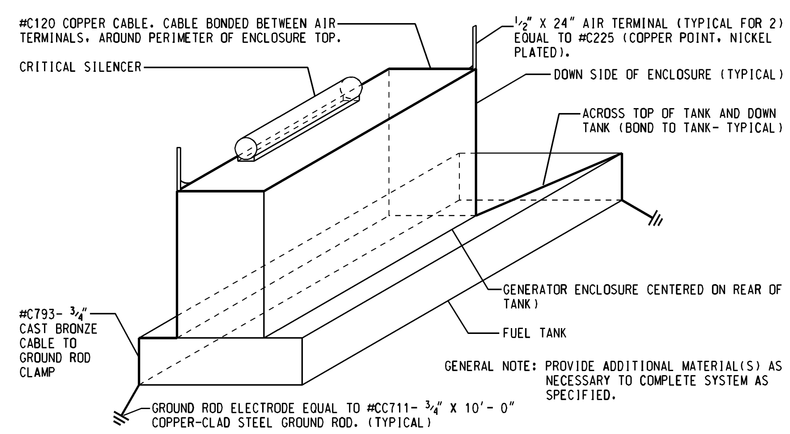

GENERAL NOTE: PROVIDE ADDITIONAL MATERIAL(S) AS NECESSARY TO COMPLETE SYSTEM AS SPECIFIED.

GENERATOR LIGHTNING PROTECTION DIAGRAM

SCALE: NONE

G13

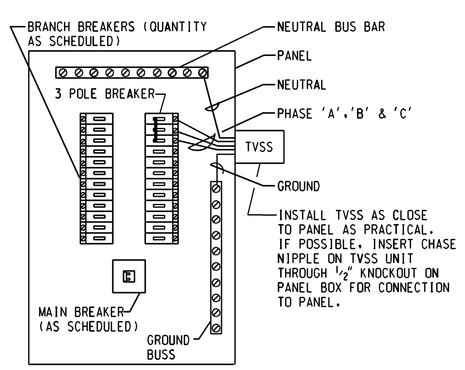

NOTE: CONNECT THE PHASE 'A','B' & 'C' WIRES OF TVSS UNIT TO AN EXISTING 3 POLE BREAKER WITH AN AMPACITY NOT LESS THAN 20 NOR MORE THAN 60. IF NO SUCH BREAKER EXIST, INSTALL ONE 20 AMP/3 POLE BREAKER FOR CONNECTION TO TVSS.

TVSS INSTALLATION WIRING DIAGRAM MAIN AND BRANCH PANELS

SCALE: NONE

J10

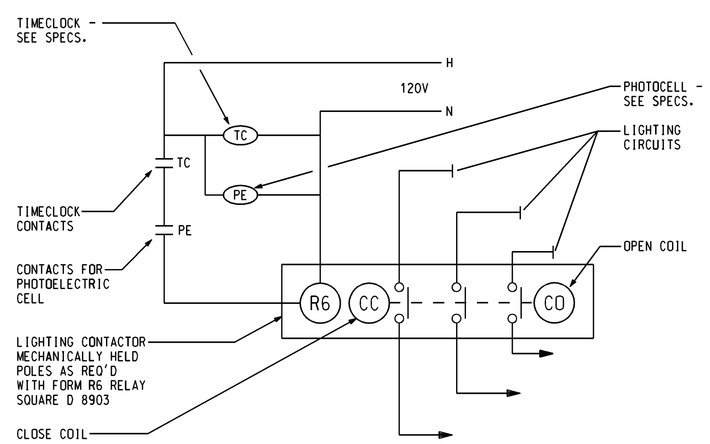

MECHANICALLY HELD OUTSIDE LIGHTING CONTROL

SCALE: NONE

J8

USE EQUIPMENT EQUAL TO APT: TE/FA FOR FIRE ALARM - TE/DA FOR TELEPHONE/DATA

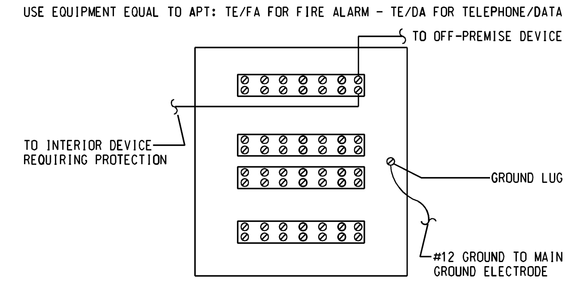

NOTES:
1. MOUNT DEVICE APPROXIMATELY 10' AWAY FROM FIRE ALARM PANEL OR TELEPHONE EQUIPMENT.
2. TERMINATE OFF-PREMISE CONDUCTORS ON INPUT SIDE OF DEVICE.
3. CONNECT OUTPUT SIDE OF DEVICE TO EQUIPMENT REQUIRING PROTECTION.
4. CONNECT THE GROUND LUG TO BUILDING GROUND WITH 3#12 COPPER WIRE.

TVSS INSTALLATION WIRING DIAGRAM INCOMING DATA AND FIRE LINES

SCALE: NONE

J9

SURGERY CENTER OF ATHENS AT ATHENS MEDICAL PLAZA I
2142 WEST BROAD STREET
ATHENS, GEORGIA

THIS DOCUMENT CONTAINS INFORMATION THAT IS PROPRIETARY TO DAVIS, STOKES COLLABORATIVE, P.C. THIS DOCUMENT AND/OR ITS CONTENTS MAY NOT BE REPRODUCED OR DISCLOSED TO OTHERS, EITHER IN WHOLE OR IN PART, WITHOUT THE PRIOR WRITTEN CONSENT OF DAVIS, STOKES COLLABORATIVE, P.C. COPYRIGHT '2+1', ALL RIGHTS RESERVED

DAVIS · STOKES
COLLABORATIVE, P.C.
A · R · C · H · I · T · E · C · T · S
7121 CROSSROADS BLVD. BRENTWOOD, TENNESSEE 37027
TEL: 615-726-0010
FAX: 615-726-2090
http://www.dsccol.com EMAIL: dsccinfo@dsccol.com

REVISION

NO.	DATE	DESCRIPTION

E4.01

ISSUE DATE:	JOB NUMBER
02.01.11	10061

bferguson
8.0 - 1/ in.