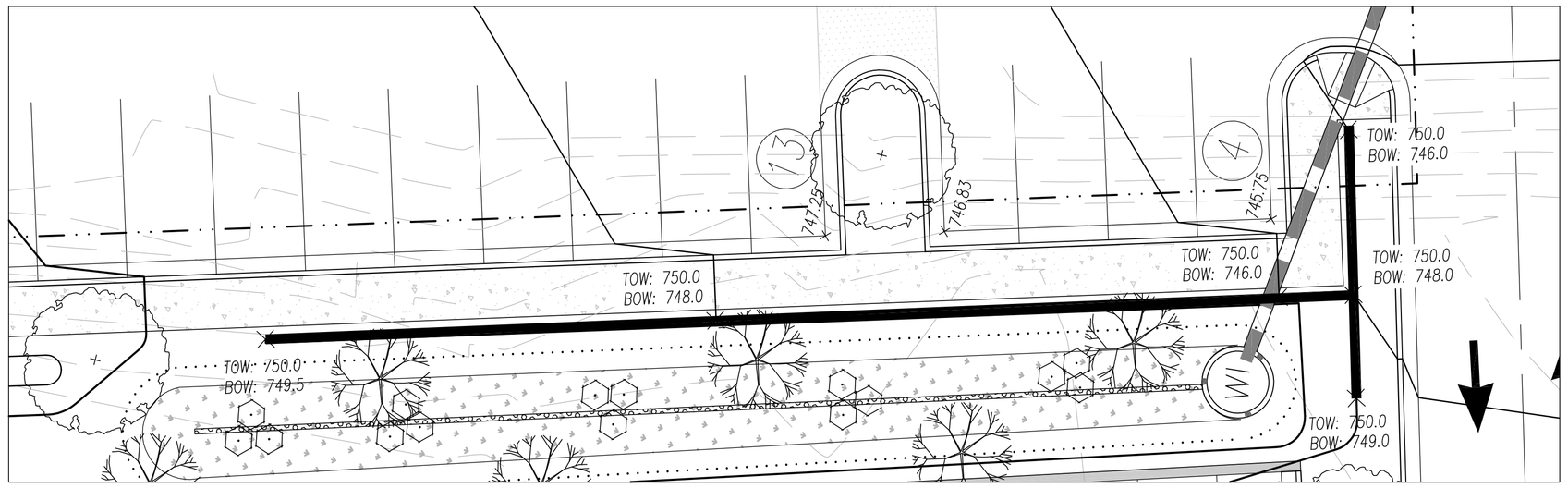

GRAPHIC SCALE

10 0 5 10 20 40

(IN FEET)
1 inch = 10 ft.

RETAINING WALL NOTES:

1. RETAINING WALLS TO BE CONSTRUCTED ON A PREPARED SUBGRADE. THE MINIMUM SOIL BEARING PRESSURE SHALL BE 3000 PSF.
2. CONCRETE SHALL HAVE A MINIMUM 28 DAY COMPRESSIVE STRENGTH OF 4000 PSI.
3. REINFORCING STEEL SHALL BE ASTM A615 GRADE 60.
4. PROVIDE 1" EXPANSION JOINTS AT 50 FOOT MAXIMUM SPACING. THE JOINT SHALL NOT EXTEND THROUGH THE FOOTING. THE JOINT SHALL BE CONSTRUCTED WITH A PREMOLDED JOINT FILLER, SHALL HAVE A WATER STOP ON THE EARTH SIDE, AND SHALL BE SEALED ON THE EXPOSED SIDE.
5. SUITABLE BACKFILL MATERIAL SHALL BE PLACED IN 6" MAXIMUM LIFTS AND COMPACTED TO 97% OF THE STANDARD PROCTOR DENSITY.
6. THE PREFORATED PIPES SHALL BE PLACED AT A MINIMUM GRADE OF 1 PERCENT AND SHALL HAVE A FREE OUTLET. THE PIPE SHALL BE WRAPPED WITH A FILTER FABRIC. THE PREFORATIONS SHALL BE ON THE BOTTOM.
7. REINFORCING STEEL SHALL HAVE A MINIMUM OF 2" CLEARANCE, UNLESS OTHERWISE NOTED.
8. PROVIDE CONSTRUCTION JOINT AT 40 FEET MAX. SPACING.

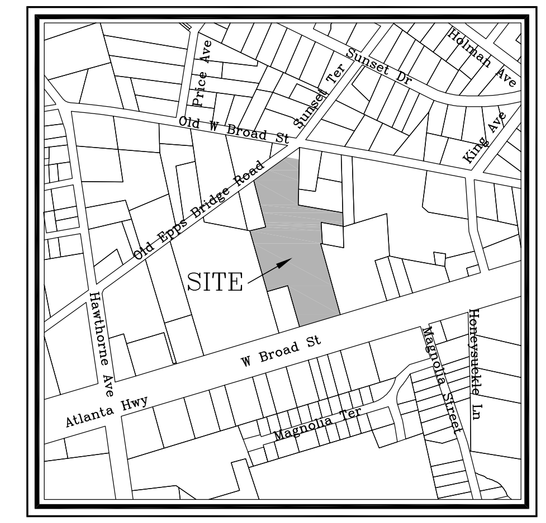

VICINITY MAP
SCALE: 1" = 500'

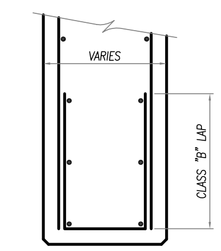

TYPICAL WALL END DETAIL
NOT TO SCALE

RETAINING WALL SCHEDULE FOR LEVEL BACKFILL W/PARKING

DIMENSIONS							REINFORCING					
A	B	C	D	E	F	G	a	b	c	d	e	f
0'-4'	0'-8"	0'-6"	2'-0"	3'-2"	1'-0"	N/A	#4 @ 12"	#4 @ 18"	#4 @ 18"	#4 @ 18"	#4 @ 12"	N/A
4'-6'	0'-8"	0'-6"	3'-0"	4'-2"	1'-0"	N/A	#4 @ 12"	#5 @ 12"	#4 @ 12"	#4 @ 12"	#4 @ 12"	N/A
6'-8'	0'-10"	1'-0"	4'-0"	5'-8"	1'-0"	1'-0"	#4 @ 12"	#6 @ 12"	#5 @ 12"	#5 @ 12"	#4 @ 12"	3-#4 BARS
8'-10'	1'-0"	1'-0"	6'-0"	8'-0"	1'-2"	1'-0"	#5 @ 12"	#6 @ 12"	#5 @ 12"	#5 @ 12"	#4 @ 12"	3-#4 BARS
10'-12'	1'-0"	1'-6"	7'-0"	9'-6"	1'-4"	1'-0"	#5 @ 12"	#6 @ 6"	#6 @ 12"	#5 @ 12"	#5 @ 12"	3-#4 BARS
12'-14'	1'-3"	1'-6"	9'-0"	11'-9"	1'-4"	1'-3"	#5 @ 12"	#6 @ 6"	#7 @ 12"	#5 @ 12"	#5 @ 12"	3-#4 BARS
14'-16'	1'-3"	2'-0"	10'-0"	13'-3"	1'-6"	1'-3"	#5 @ 12"	#7 @ 6"	#6 @ 6"	#5 @ 12"	#5 @ 12"	3-#4 BARS

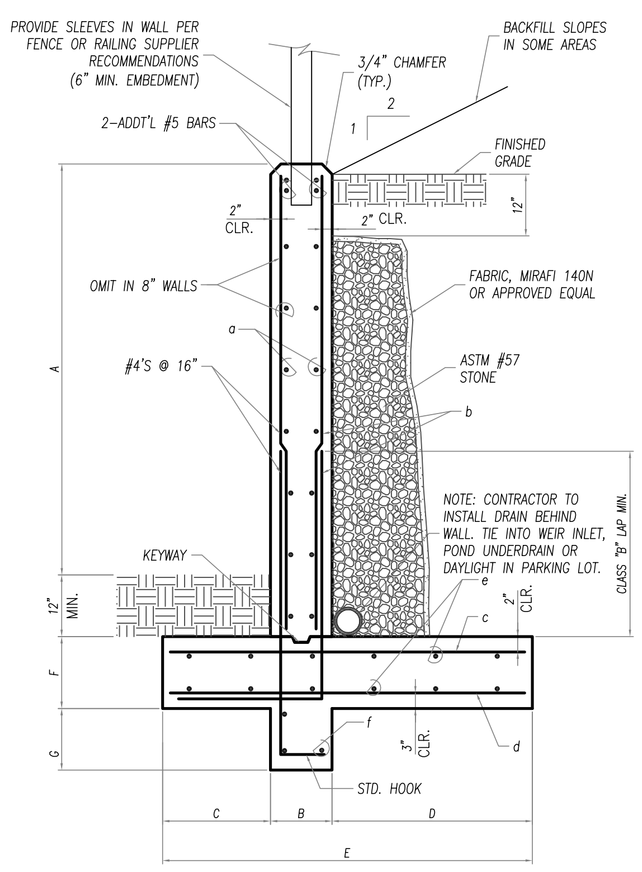

TYPICAL RETAINING WALL SECTION
NOT TO SCALE

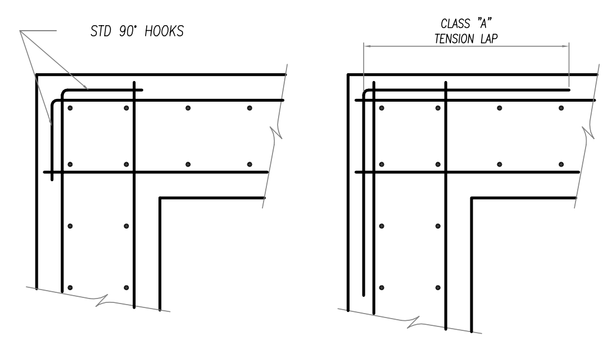

NOTE: SINGLE CURTAIN DETAIL SIMILAR.

TYPICAL DOUBLE CURTAIN CORNER DETAIL
NOT TO SCALE

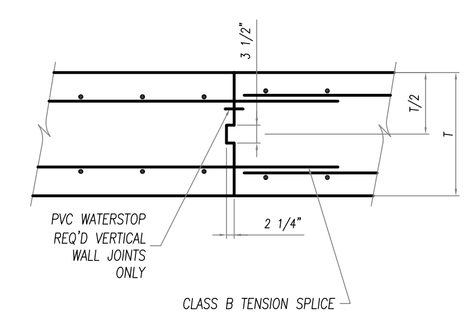

TYPICAL CONSTRUCTION JOINT DETAIL
NOT TO SCALE

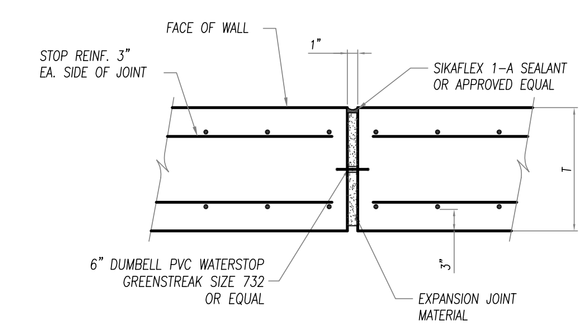

TYPICAL EXPANSION JOINT DETAIL
NOT TO SCALE

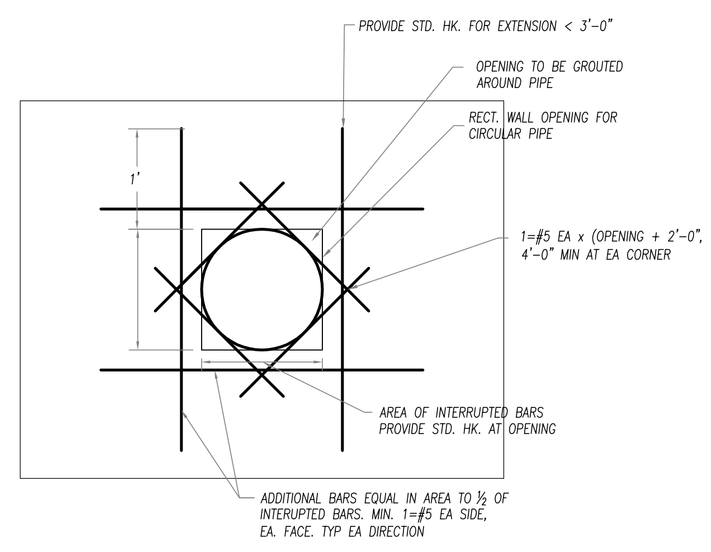

TYPICAL WALL OPENING DETAIL
NOT TO SCALE

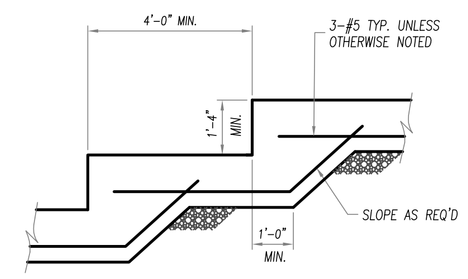

TYPICAL FOOTING STEP DETAIL
NOT TO SCALE

✓ REVIEW SET ☐ BID SET ☐ CONSTRUCTION SET

Williams &Associates
ENGINEERING • SURVEYING
LANDSCAPE ARCHITECTURE
2470 Daniells Bridge Road, Suite 161
Athens, Georgia 30606
P. 706.310.0400
F. 706.310.0411
www.gaplanning.com

ATHENS MEDICAL COMPLEX

ATHENS-CLARKE COUNTY, GEORGIA

4.425 ACRES - WEST BROAD STREET

DATE: 03/01/2011

REVISIONS

DATE	COMMENT
03/01/11	Per generator pad and enclosure addition and planning comments.
04/29/11	Per field change to bioretention pond.
05/12/11	Per ACCPW comments on field change to biorentention pond.
07/12/11	Per Building 200 footprint and grading modifications.
07/18/11	Per ACCPD TMP comments and ACCPU plans review comments.
07/21/11	Per ACCPD TMP comments.

GEORGIA REGISTERED No. 29629 PROFESSIONAL ENGINEER B. FRANK PITTMAN

ALL DRAWINGS SHALL REMAIN THE PROPERTY OF WILLIAMS & ASSOCIATES. THESE INSTRUMENTS OF SERVICE ARE TO BE USED SOLELY FOR THIS SPECIFIC PROJECT. WILLIAMS & ASSOCIATES SHALL RETAIN ALL LEGAL RIGHTS TO THE USE OF THE INSTRUMENTS OF SERVICE AND SHALL RETAIN FULL PROTECTION UNDER UNITED STATES COPYRIGHT LAW.

10047

WALL DETAILS

20.1

X:\Projects\10047\Design\Construction\10047-ConstSet-R\2.dwg 8/03/11 09:20:17 AM jgreer