© COPYRIGHT 2007, DAVIS, STOKES COLLABORATIVE P.C.
ALL RIGHTS RESERVED

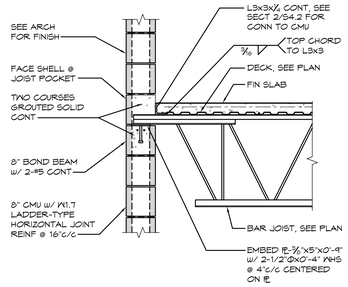

1 SECTION

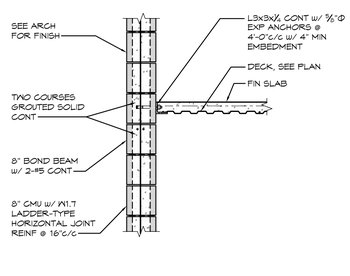

2 SECTION

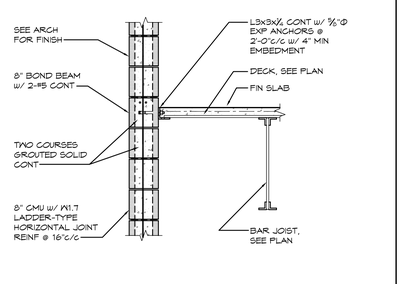

3 SECTION

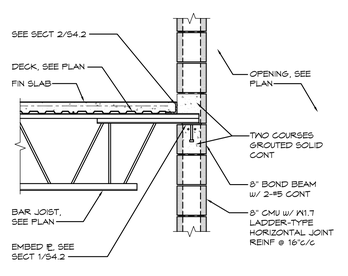

4 SECTION

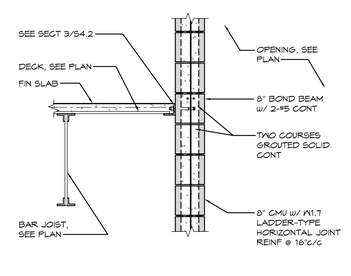

5 SECTION

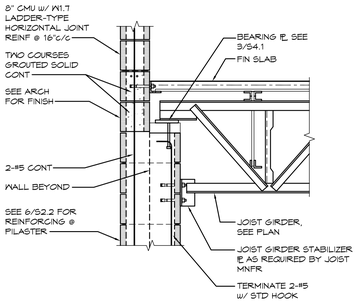

NOTE:
SEE JOIST GIRDER SEAT DETAIL FOR INFO NOT SHOWN.

6 SECTION @ JOIST GIRDER @ PILASTER

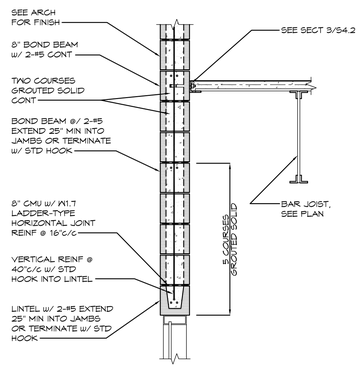

7 SECTION @ LARGE OPENING

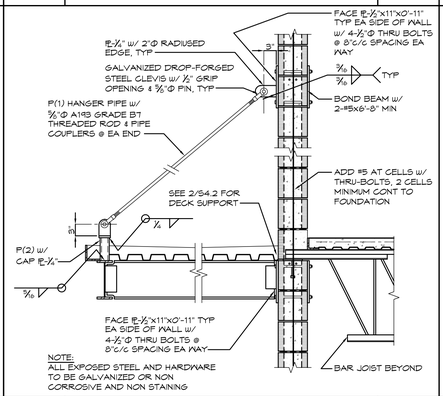

NOTE:
ALL EXPOSED STEEL AND HARDWARE TO BE GALVANIZED OR NON CORROSIVE AND NON STAINING

8 SECTION @ CANOPY

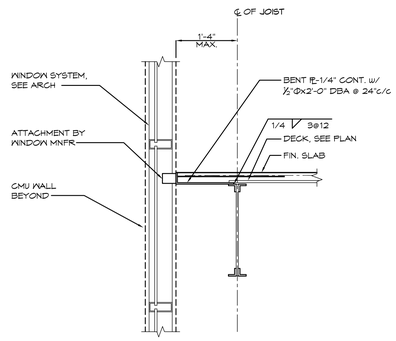

9 SECTION @ CURTAINWALL

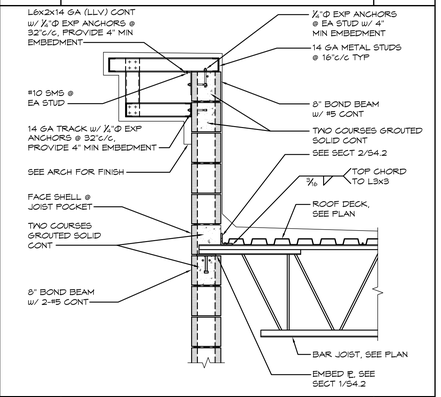

10 SECTION

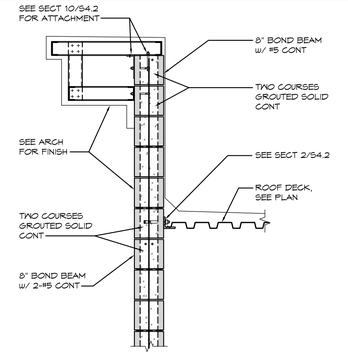

11 SECTION

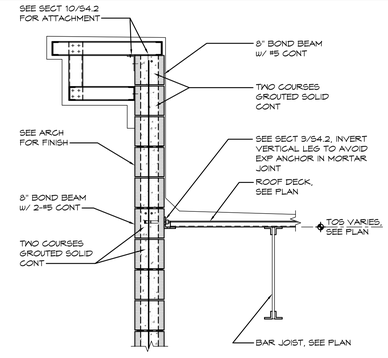

12 SECTION

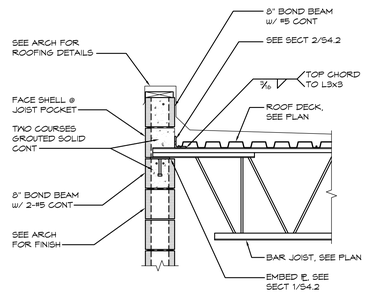

13 SECTION

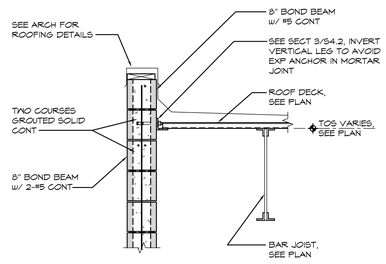

14 SECTION

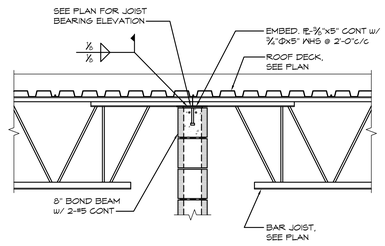

15 SECTION

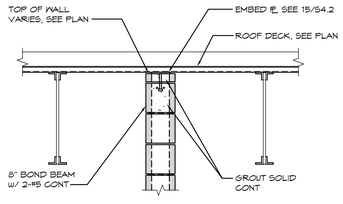

16 SECTION

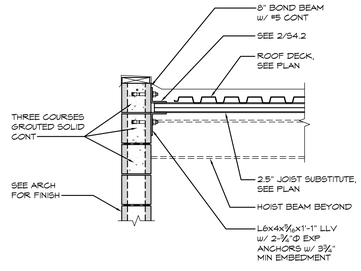

17 SECTION

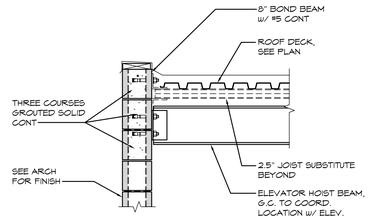

18 SECTION

LATTA STRUCTURAL ENGINEERS, LLC
www.LattaSE.com
GEORGIA REGISTERED PROFESSIONAL ENGINEER No. PE034623 TRENT E. LATTA 07/29/11

ATHENS MEDICAL PLAZA II
BUILDING 200
2142 WEST BROAD STREET
ATHENS, GEORGIA

THIS DOCUMENT CONTAINS INFORMATION THAT IS PROPRIETARY TO DAVIS, STOKES COLLABORATIVE, P.C. THIS DOCUMENT AND/OR ITS CONTENTS MAY NOT BE REPRODUCED OR DISCLOSED TO OTHERS, EITHER IN WHOLE OR IN PART, WITHOUT THE PRIOR WRITTEN CONSENT OF DAVIS, STOKES COLLABORATIVE, P.C. COPYRIGHT 2007, ALL RIGHTS RESERVED

DAVIS · STOKES
COLLABORATIVE, P.C.
A · R · C · H · I · T · E · C · T · S
7121 CROSSROADS BLVD. BRENTWOOD, TENNESSEE 37027
TEL: 615-726-0010
FAX: 615-726-2090
http://www.dsccol.com EMAIL: dsccinfo@dsccol.com

REVISION

NO.	DATE	DESCRIPTION
.		
.		
.		
.		
.		

FRAMING SECTIONS & DETAILS

S4.2

ISSUE DATE:	JOB NUMBER
07.29.11	10006